ACE LEDS CONSTANT POWER

Input Voltage 120-277 V
Output Power 10 W (Constant)

ACE-G10HI1555CP
Hazardous Location Emergency LED Driver

Primary Specifications:

Output Power	Input Power	Input Current Max	Emergency Operating Time	Battery	Input Voltage	Output Voltage	Ambient Operating Temperature	UL Recognized for US and Canada
10 W	8 W	110 mA	90 min.	$LiFePO_4$ 24 Hour recharge 7 to 10 year Life expectancy	120-277 Vac 50/60Hz	15-55 V[1]	0 ˚C through 55 ˚C	UL and cUL (UL924) Emergency LED Driver

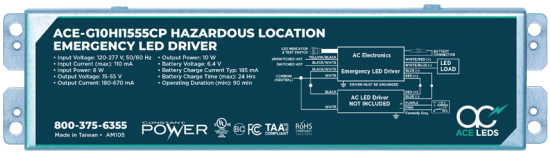

Description:

The ***ACE-G10HI1555CP*** from ACE LEDs is a UL Recognized Emergency LED Driver suitable for Class I, Division 2 Hazardous location luminaires. The ***ACE-G10HI1555CP*** enables the normal LED fixture to be used for both normal and emergency mode. The ***ACE-G10HI1555CP*** contains a $LiFePO_4$ battery, a high-efficiency battery charger, control circuitry, and high-efficiency power converter circuits, in a single metal enclosure. In the event of a normal Power failure, the ***ACE-G10HI1555CP*** switches to emergency-mode and operates the fixture's LED array or module 90 minutes at a constant power of 10 W. When normal power returns, the ***ACE-G10HI1555CP*** returns to normal-mode. The ***ACE-G10HI1555CP*** can be used in switched or unswitched fixture applications. The ***ACE-G10HI1555CP*** can drive any LED array or module in emergency-mode with a voltage range of 15-55 Vdc and that can operate at a current range of 180 mA to 670 mA.

Additional Specifications:

Normal (ac) driver maximum output current:.....5 A[2]
Output current range:.....180 mA to 670 mA[3]
Surge protection:.....3 kVp
Maximum case temperature Tc:.....66 °C
Nominal battery voltage:.....6.4 V
Battery charge current Typ:.....185 mA
Storage time (max) and Storage temperature
.....12 months (0 °C to 35 °C)
Metal enclosure IP rating:.....IP65
Weight.....4.0 lb
Dimensions:.....9.5 in L x 2.4 in W x 1.46 in H

[1]The emergency-mode output voltage operating range is 15 - 55 V. The absolute maximum output voltage is 60 V to comply with class 2 regulations.

[2]The Normal (ac) Driver maximum output current is the maximum current allowed to pass through the ***ACE-G10HI1555CP*** circuitry in Normal-mode.

[3]The emergency-mode output current is automatically adjusted to maintain a constant output power across the output voltage range.

*Warranty: 5 years based on a maximum case temperature of ≤ 60 °C, 3 years warranty based on a maximum case temperature of ≤ 66 °C

5-Year USA-Backed Warranty*

See complete AC Electronics/ACE LEDS Warranty information for details.

Safety and Regulatory Compliance:

- UL and cUL Component Recognized as an Emergency LED Driver (UL924) for factory installation
- UL & cUL Class 2 output (UL1310 compliant)
- CEC Title 20 compliant: Certified in CA Title 20 Appliance Efficiency Database – Battery Charger
- EMI: Complies to FCC commercial limits
- RoHS compliant

Features, Benefits, and Applications:

- Constant output power: Maintains constant emergency light levels over the full 90-minute runtime and over the output voltage range.
- Self-sensing output voltage: Automatically adjusts over the 15-55 V range to maintain constant power within the class 2 voltage range.
- Includes input over voltage surge protection, output short circuit, open circuit, and over–voltage protection, as well as over-temperature protection for improved reliability.
- Two-wire universal input: Reduces wiring errors and reduces installation time and complexity.
- Includes a miniature illuminated test switch status indicator: Enables mounting in small spaces.
- Suitable for indoor and damp locations.
- Compatible with a variety of LED fixtures, such as emergency-only fixtures, as well as new and existing fixtures.
- Isolated relay.
- Suitable for Class 1, Division 2 Hazardous location luminaries.

For questions or to place an order contact us at oemsales@aceleds.com or 800-375-6355
or your local WPG Americas Sales representative at inquiry@wpgamericas.com or 888-WPG8881

©2023 17Oct2023

Data is based upon tests performed by ACE LEDS in a controlled environment and representative performance. Actual performance can vary depending on operating conditions. Specifications are subject to change without notice. All specifications are nominal unless otherwise noted.

ACE LEDS

ACE-G10HI1555CP Hazardous Location Emergency LED Driver

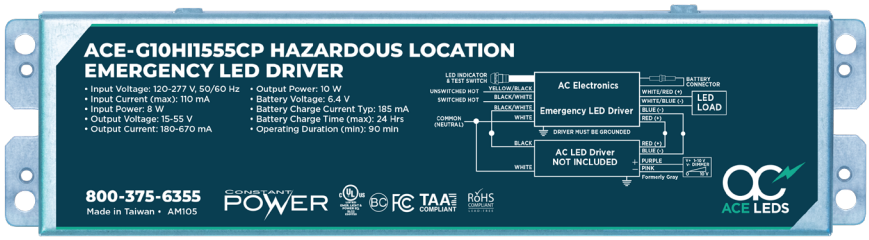

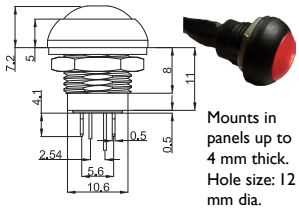

Mounts in panels up to 4 mm thick. Hole size: 12 mm dia.

miniature illuminated test switch

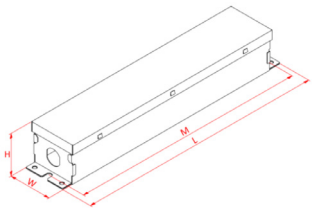

Lead Lengths					
White	6"	White/Red	6"	Test Switch/	7.08"/
Yellow/Black	6"	White/Blue	6"	LED Indicator	23.62"
Black/White	6"	Blue	6"	Battery Connector	33.07"
Black/White	6"	Red	6"		

Dimensions			
Length	9.5"	Height	1.46"
Width	2.4"	Mounting Length	8.9"

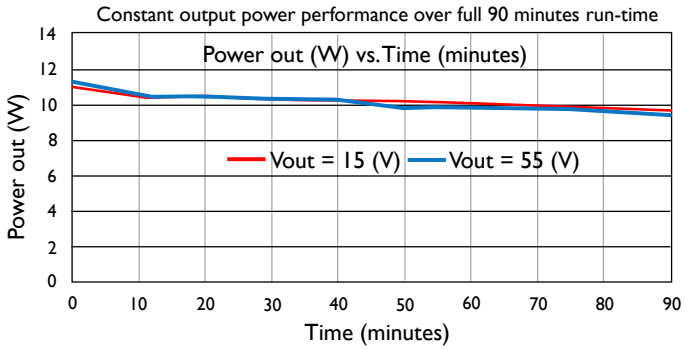

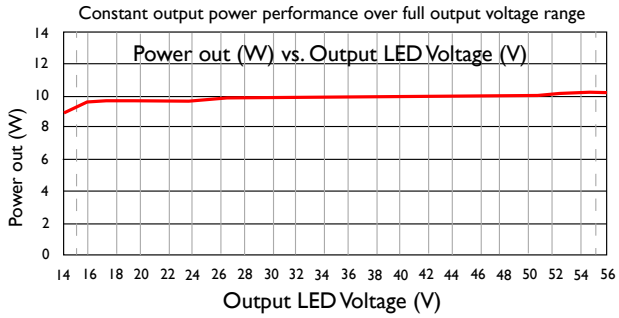

INSTALLATION:

The ***ACE-G10HI1555CP*** must be connected to the unswitched line (constant hot) permanently via the YELLOW/BLACK wire. The WHITE/BLACK wire may be connected to the switched hot line for switched fixture operation or connected to the unswitched line for unswitched fixture operation.
The emergency LED driver must be fed from the same branch circuit as the normal AC LED driver (if used). This emergency LED driver must not be installed with fixtures where the ambient temperature may fall below 0 °C (32 °F).

The ***ACE-G10HI1555CP*** Emergency LED Driver comes in a single metal enclosure with a separate miniature illuminated test switch status indicator. This emergency LED driver is suitable for installation in sealed and gasketed fixtures.
The maximum remote mounting distance to the LEDs is 18 feet.
The emergency LED driver metal case should be grounded.
18 AWG 600 V, 105 °C tinned stranded copper lead-wires are required for installation.

Specifications:

Emergency lighting shall be provided by using the AC Electronics ***ACE-G10HI1555CP*** Emergency LED Driver with a compatible LED fixture. The ***ACE-G10HI1555CP*** shall contain a LiFePO4 battery with a nominal voltage of 6.4 V and 3300 mAh capacity, a high-efficiency battery charger, control circuitry, a high-efficiency two-wire universal input converter (120 through 277 Vac), high-efficiency output LED driver with soft-switching technology to prevent noise to protect LED modules, all contained in a single metal enclosure. A separate miniature illuminated test switch status indicator with installation hardware shall be provided for the purposes of performing periodic testing and indicate status change of the battery and battery-charger. The ***ACE-G10HI1555CP*** Emergency LED Driver shall be capable of delivering a constant power of 10 W to an LED load of 15 – 55 V for a minimum of 90 minutes.
The ***ACE-G10HI1555CP*** Emergency LED Driver shall have a maximum of 8 W input power and shall comply with emergency standards established by the current NEC and shall meet CEC Title 20 (California Energy Commission) efficiency standards.
The ***ACE-G10HI1555CP*** Emergency LED Driver shall comply with part 15 of the FCC Rules. The ***ACE-G10HI1555CP*** Emergency LED Driver shall be UL and cUL Component Recognized as an Emergency LED Driver (UL924) for factory installation and suitable for use in Class I Division 2 hazardous location luminaires. The ***ACE-G10HI1555CP*** is suitable for indoor and damp locations and for sealed and gasketed fixtures.

For questions or to place an order contact us at oemsales@aceleds.com or 800-375-6355
or your local WPG Americas Sales representative at inquiry@wpgamericas.com or 888-WPG8881

©2023 17Oct2023

Data is based upon tests performed by ACE LEDS in a controlled environment and representative performance. Actual performance can vary depending on operating conditions. Specifications are subject to change without notice. All specifications are nominal unless otherwise noted.

Typical wiring diagram for switching the switched hot AC power for the normal AC LED Driver

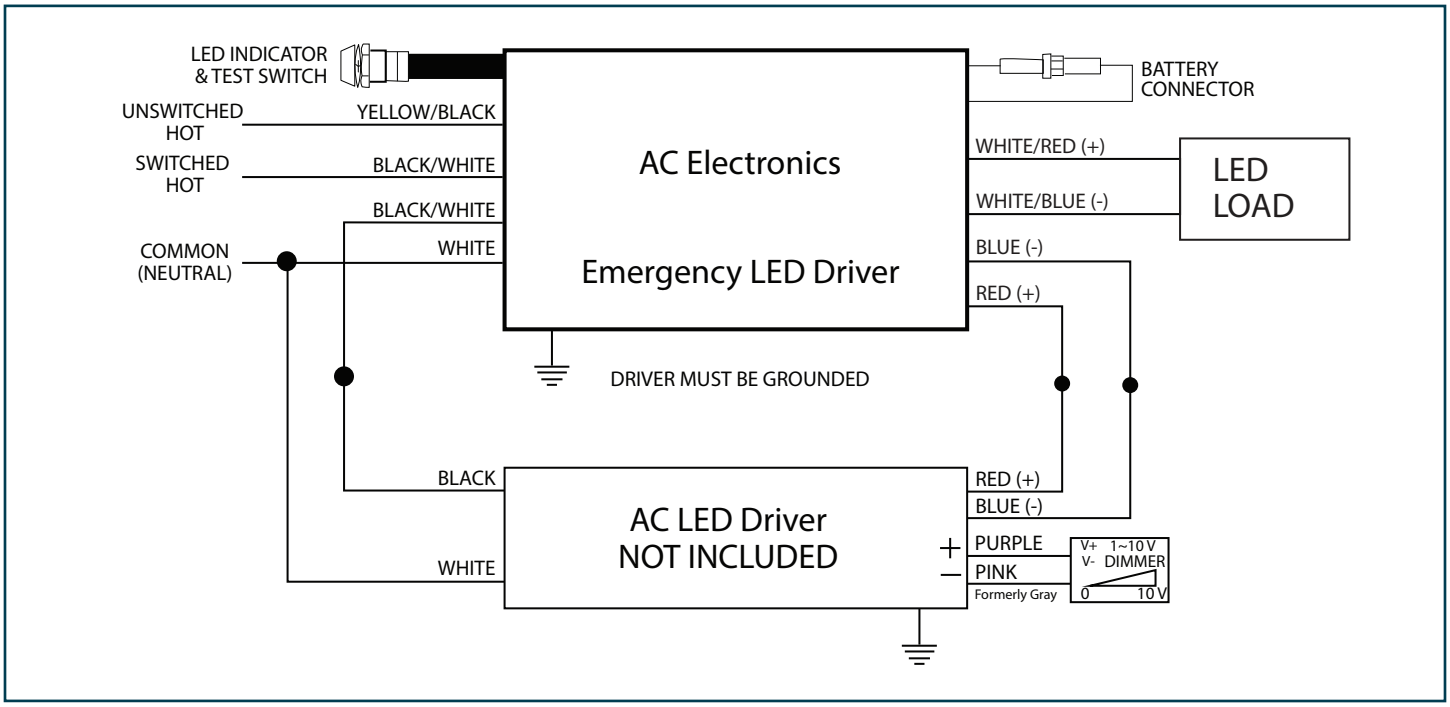

Typical wiring diagram for switching the neutral wire of the normal AC LED DRIVER

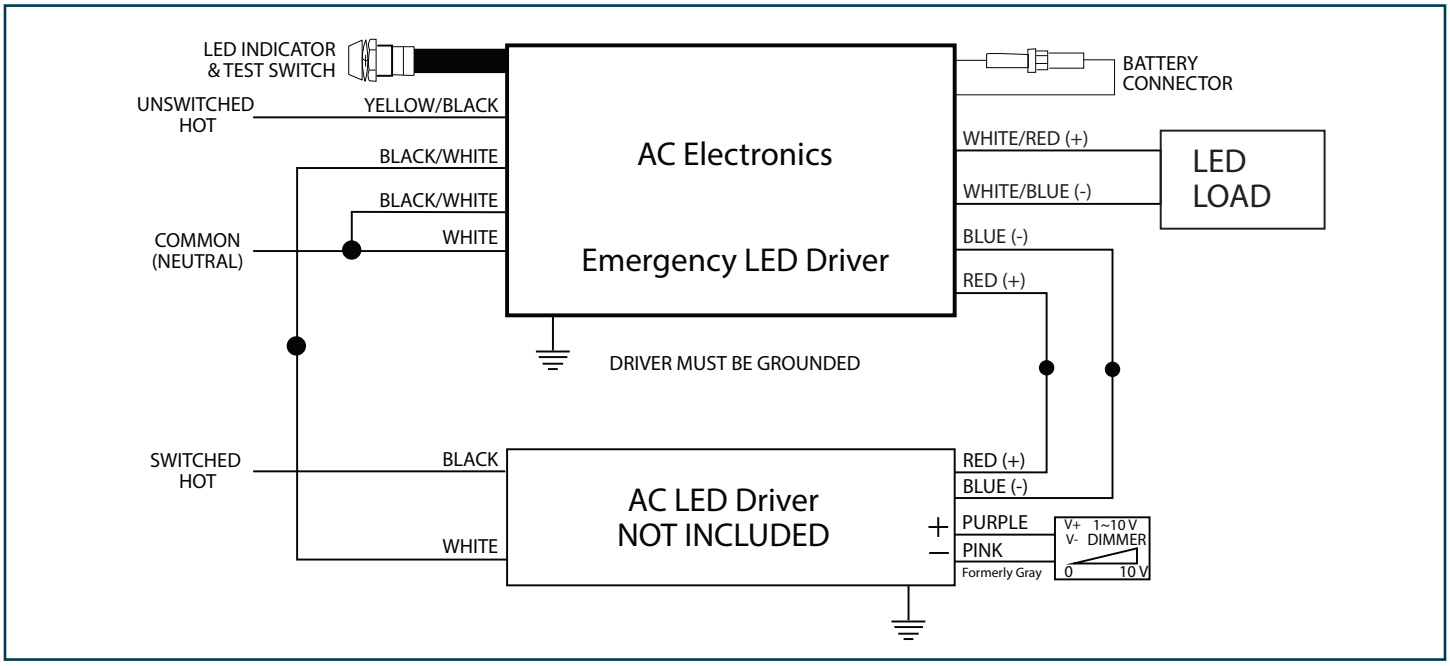

***AC Electronics/ACE LEDS warrants to the purchaser that each Emergency LED Driver will be free from defects in material or workmanship for a period of 5 years when operated at max case temp of up to <60°C when properly installed and under normal conditions of use. See aceleds.com for complete warranty policy.**

For questions or to place an order contact us at oemsales@aceleds.com or 800-375-6355 or your local WPG Americas Sales representative at inquiry@wpgamericas.com or 888-WPG8881

©2023 17Oct2023

Data is based upon tests performed by ACE LEDS in a controlled environment and representative performance. Actual performance can vary depending on operating conditions. Specifications are subject to change without notice. All specifications are nominal unless otherwise noted.